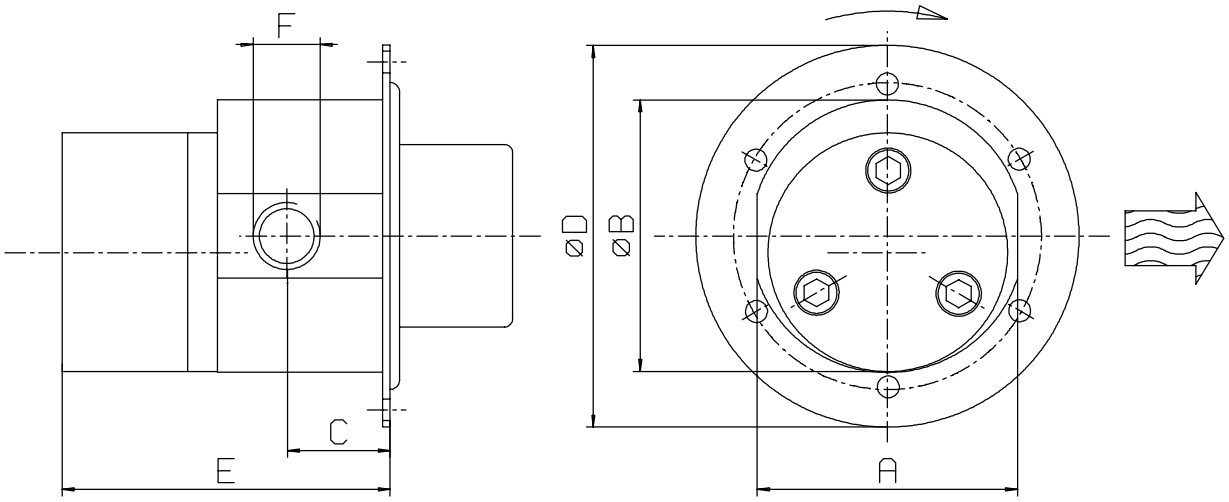

flow and rotation direction left handed (standard)
in case of deviation, please order explicit

In general ***variopumps***-gearpumps with magnetic-coupling fitted are delivered with drive and extension flange as a unit.

dim/pp-size	VPS-0,3	VPS-0,6	VPS-0,9			
A	38	38	38			
øB	40	40	40			
C	15	15	15			
øD	56	56	56			
E	48	52,5	57			
F	1/8"NPT	1/8"NPT	1/8"NPT			

rights to modify reserved

Dimensions VPS

with extension-flange and drive (IM B34)

variopumps

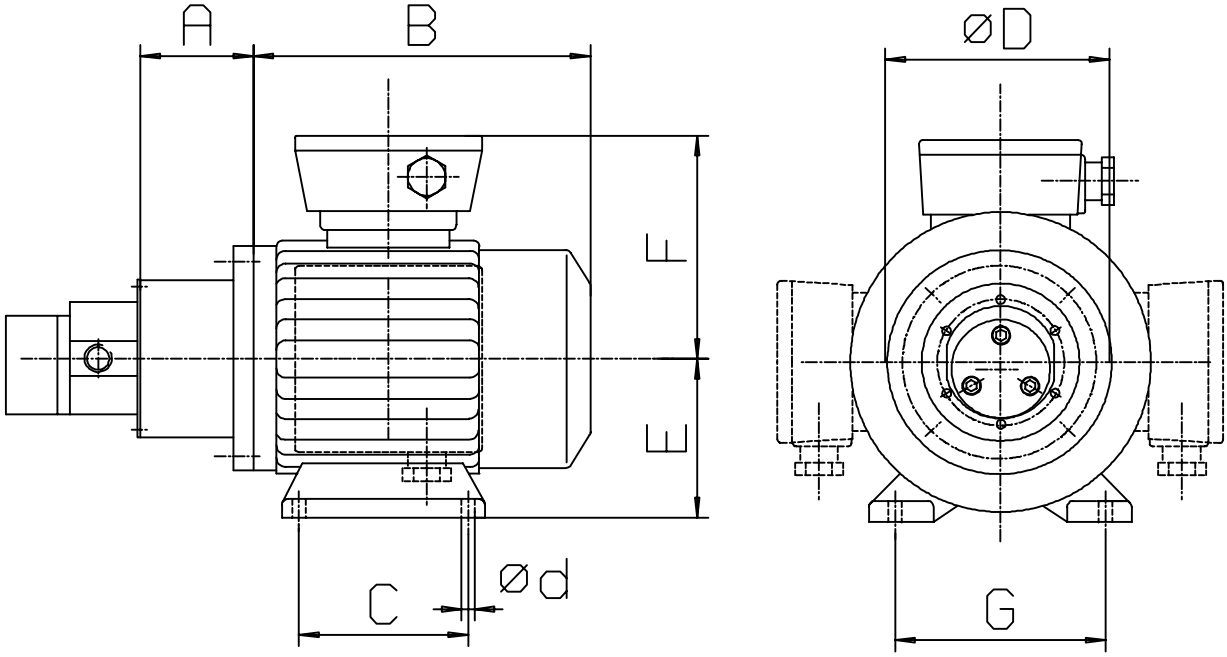

dim./fl.-size	L80				
øD	80				
A	40				
drive					
B					
C					
ød					
E					
F					
pump-size	0,3				
	0,6				
	0,9				

rights to modify reserved

variopumps Pumpenbau GmbH - www.variopumps.de - info@variopumps.de - phone / fax +49 7474 456-78-67 / -68